环保物料

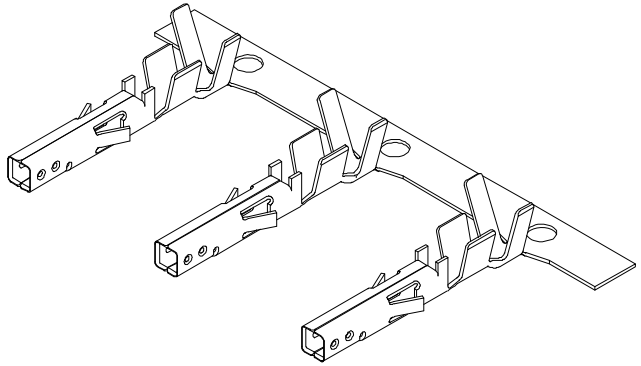

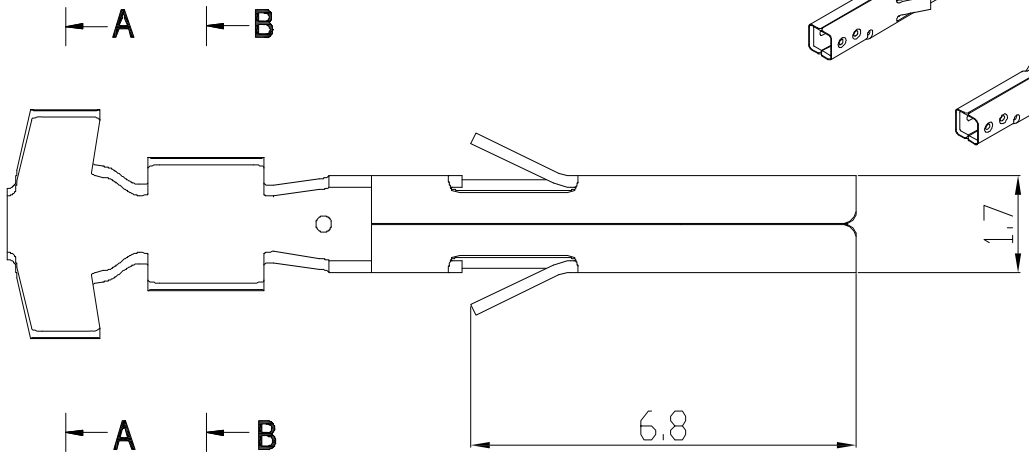

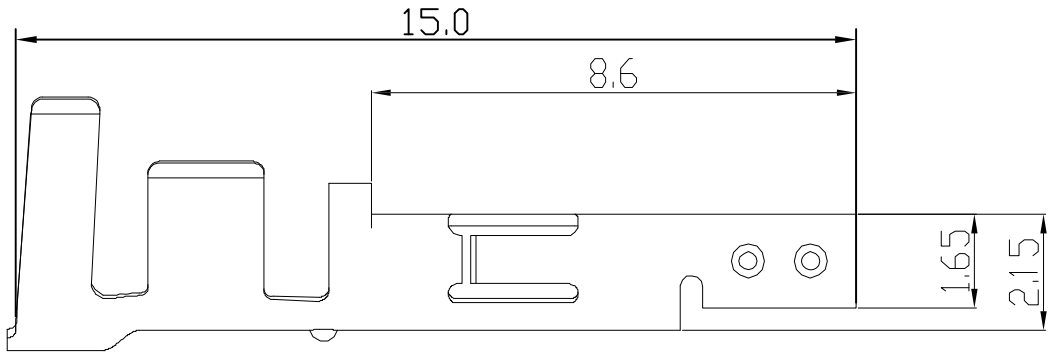

主要技术参数
Main Specifications

线数(poles):2 to 6 / 2 to 24P
额定电流(Current rating): 9.0A AC,DC
额定电压(Voltage rating):300V AC,DC
温度范围(Temperature range): -25℃ to +85℃
接触电阻(Contact resistance): ≤15mΩ
绝缘电阻(Insulation resistance): ≥1000MΩ
耐电压(Withstand voltage):1500V AC/minute
适用线规(Applicable wire): AWG #28 to #22
适用基板厚度 Applicable PC board thickness: 1.6 to 2.0mm

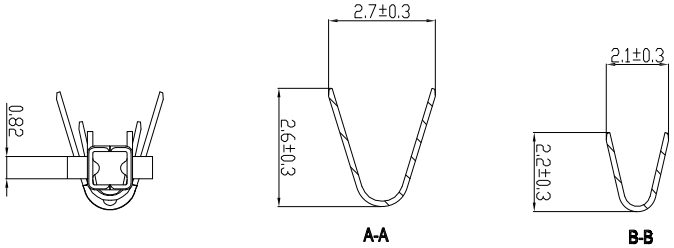

低脚

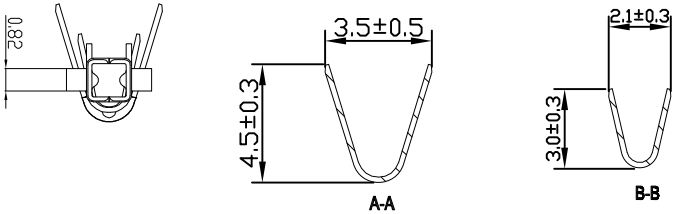

高脚

Wire Range	Insulation O.D.	Material	Finish	Qty/Reel
高脚 AWG #18～#22 低脚 AWG #24～#28		Phosphor bronze	Tin-plated	5000PCS/Roll

				GENERAL TOLERANCES		SCALE: 1:1	NAME	DATE	康导新能源	PART. NO:	24201T
				LINEAR	ANGLES	APPROVED	黎腾	2017.06.16	网址: www.dgconne.com 电话: 0769-85337633 邮箱: 2850175986@qq.com 传真: 0769-85362827	DWG. NO:	
				0.0±0.35	X° REF±6°	DESIGNER	肖坤权	2017.06.16	TITLE:		
A0	新图面发行	2017.06.16	UNIT: MM	0.00±0.25	X° ±3°	DRAWN	旷淇	2017.06.16	4.20mmPITCH TERMINAL	REV: A0	SHEET: 1/1
REV.	REVISION RECORD	DATE	SIZE: A4	0.000±0.15	X° X'±2°						