环保物料

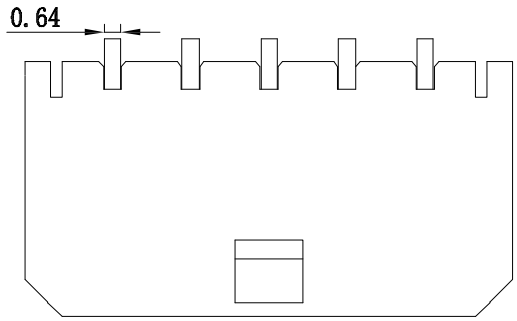

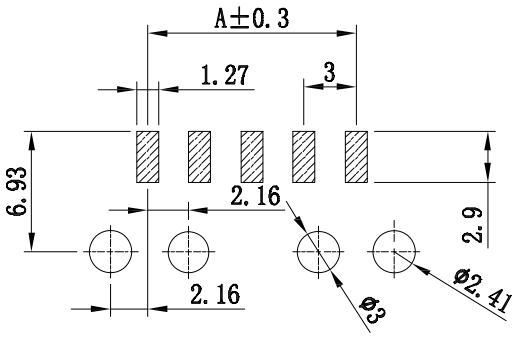

P. C. B LAYOUT

Specifications:

Contact resistance:≤20mΩ
Insulation resistance:≥1000MΩ
Rated voltage:250V AC DC
Rated current:5.0A AC DC
Withstand Voltage: 1000V AC/minute
Temperature Range:-25℃～ +85℃

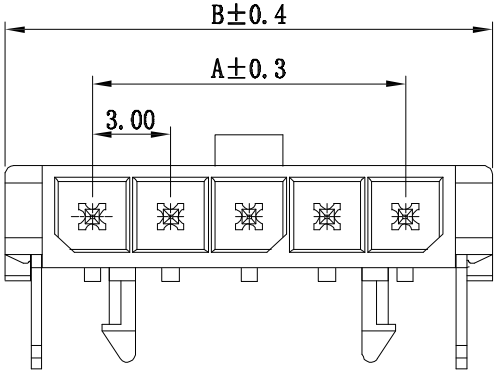

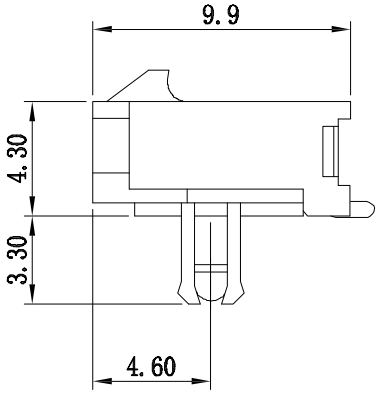

Poles	Dimensions mm	
	A	B
2	3.00	9.7
3	6.00	12.7
4	9.00	15.7
5	12.00	18.7
6	15.00	21.7
7	18.00	24.7
8	21.00	27.7
9	24.00	30.7
10	27.00	33.7
11	30.00	36.7
12	33.00	39.7

序号	图 号	名 称	材 料	数 量	附 注
3		Press-fit	Brass Tin	2	
2		Contact	Brass Tin	N	
1		Housing	LCP(UL94V-0)	1	Black

REV.	REVISION RECORD	DATE
A0	新图面发行	2017.06.16

UNIT: MM
SIZE: A4

GENERAL TOLERANCES	
LINEAR	ANGLES
0.0±0.35	X° REF±6°
0.00±0.25	X° ±3°
0.000±0.15	X° X'±2°

SCALE: 1:1	NAME	DATE
APPROVED	黎腾	2017.06.16
DESIGNER	肖坤权	2017.06.16
DRAWN	旷淇	2017.06.16

康 导 新 能 源
网址: www.dgconne.com 电话: 0769-85337633
邮箱: 2850175966@qq.com 传真: 0769-85302827

TITLE: 3.00mmPITCH 90° WAFER DIP TYPE

PART. NO: 23001AWLC
DWG. NO:
REV: A0
SHEET: 1/1